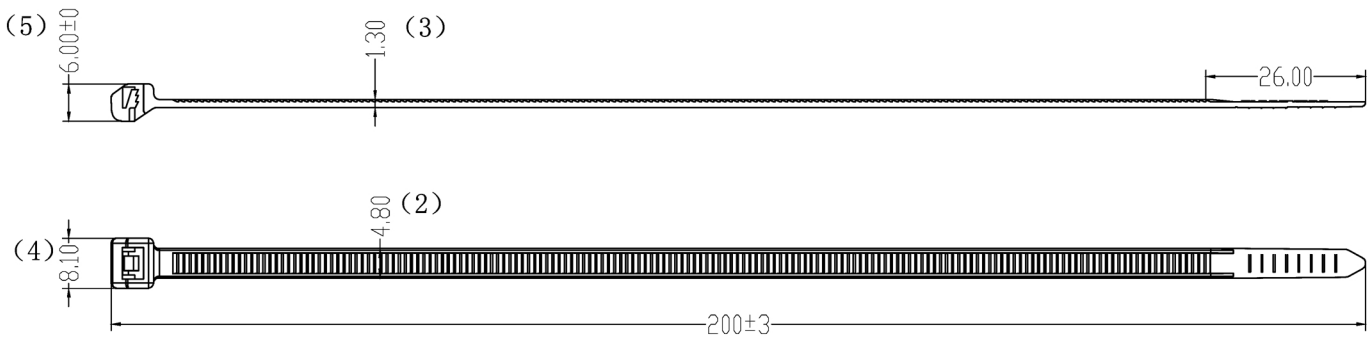

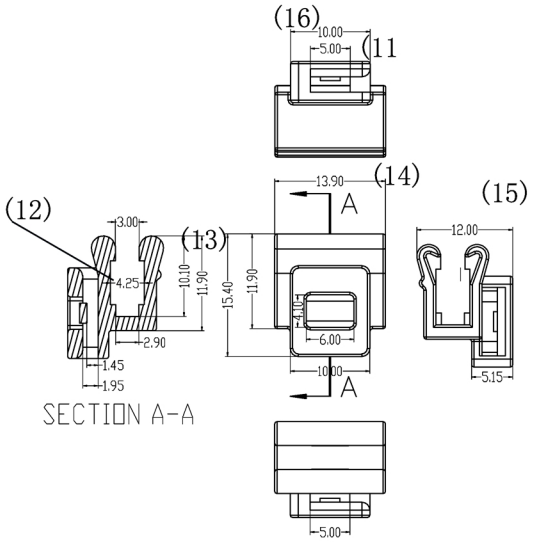

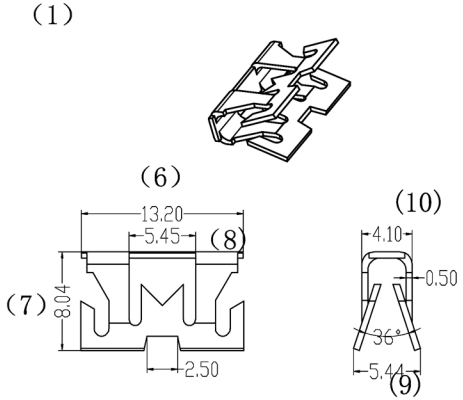

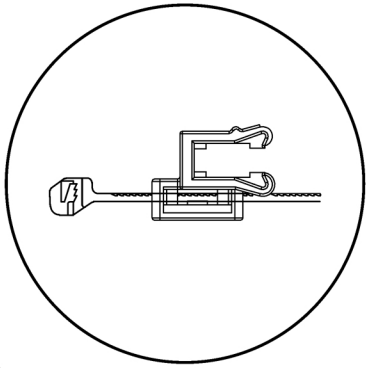

Min Bundle Diameter: 3.0mm
Max Bundle Diameter: 52.5mm
Tensile strength: 23kgs (50lbs)
for steel: 1-3mm board

1. MATERIAL Cllip: Impact, HS and UV resistnat Polyamide 6.6
2. MATERIAL Ties: HS and UV resistnat Polyamide 6.6
3. MATERIAL Clip: A4 steel (AISI316, hardness 340-370)
4. Flammability of raw material : UL 94 - HB
5. Humidity absorption: 2.4% (23° C - 50% R.H.)
6. Installation temperature: -10° C ÷ +115° C
7. Working temperature: -40° C ÷ +115° C
8. Max sustainable temperature for short time: +130°C
9. Good resistance to bases, oils, greases, oil derivates, chloride solvents. Limited resistance to acids. Not resistant to phenols.
10. Carbon black addiction gives a better UV resistance

					PRODUCT DRAWING			
					Step	Qty	Weight	Ratio
Rev	Qty	Rev number	Sign	Date		1		
Authorization	Standard	Checked	Design					Edge Clip Cable Ties
Aral Y	Aral Y	LIU MZ	Fanka				UNIT:MM	Artikelnummer: E1062630
					Total page: 1		page: 1	